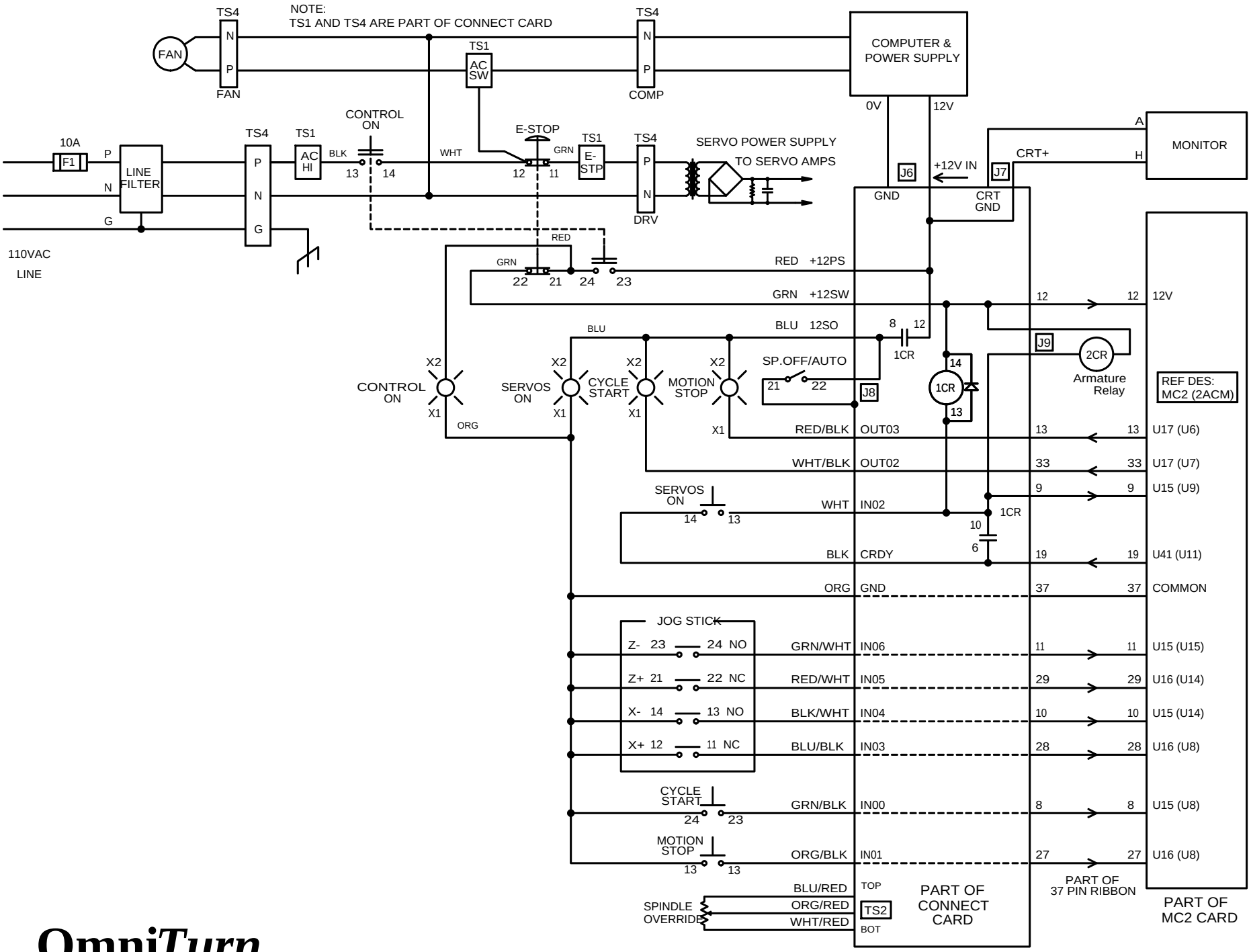


# Omni*Turn*

FRONT PANEL INTERFACE: G3 CNC

fp_sch4.dcd july 08

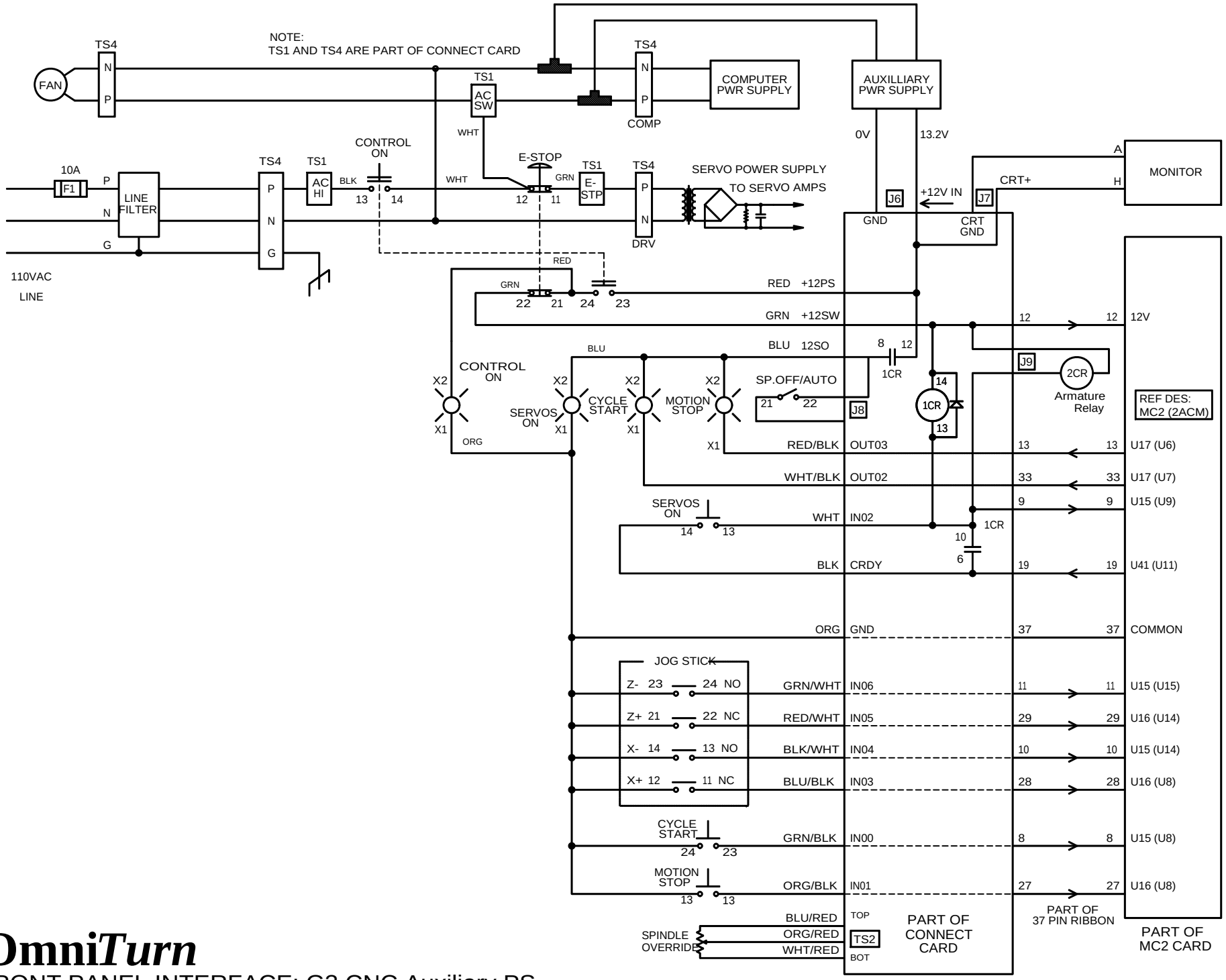


# OmniTurn

FRONT PANEL INTERFACE: G3 CNC Auxiliary PS

fp_sch8a.dcd apr 2010

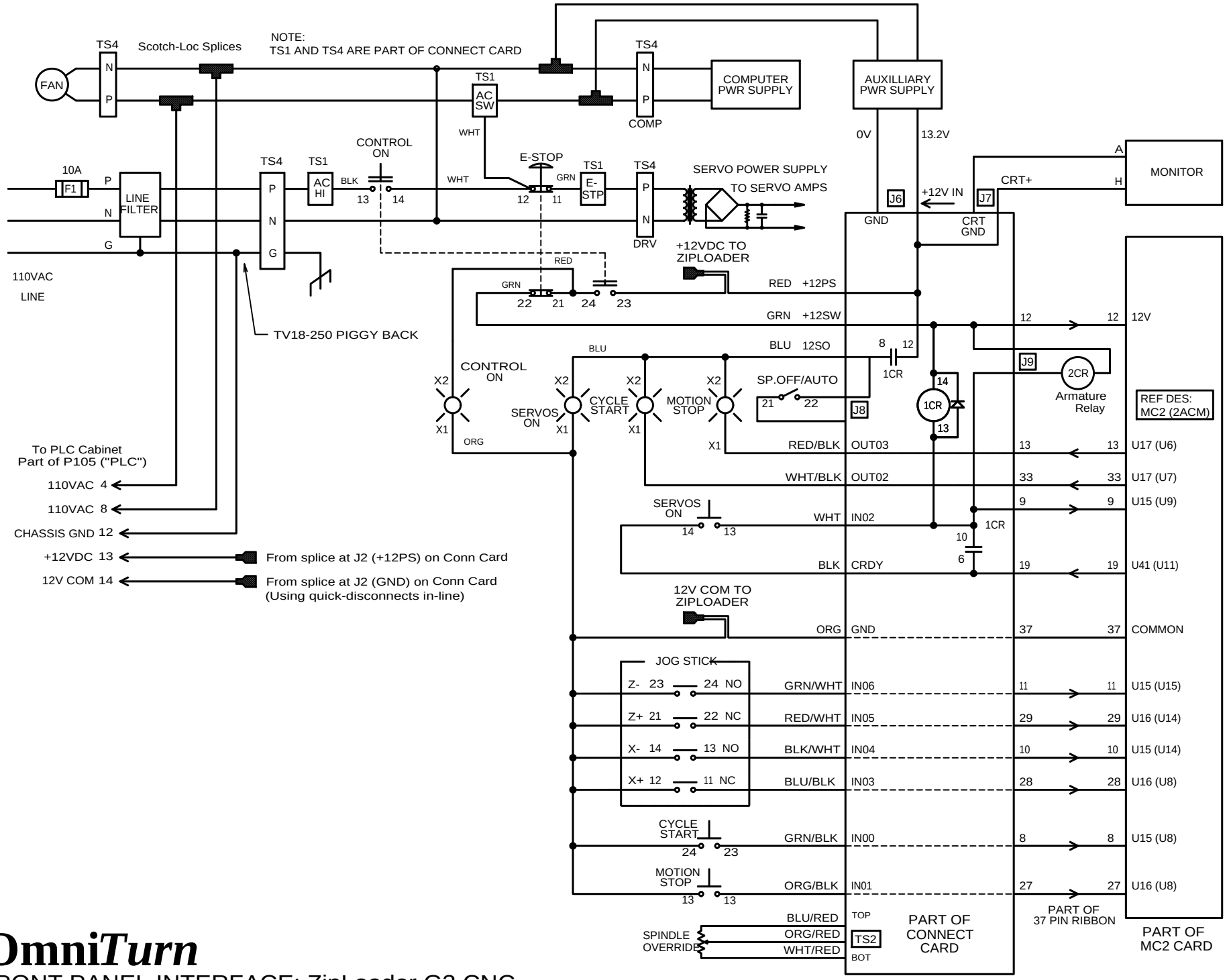


# Omni*Turn*

FRONT PANEL INTERFACE: ZipLoader G3 CNC

fp_sch8.dcd apr 2010